NOTES

MATERIAL	GENERAL PURPOSE (ABS) MATERIAL
PARTS	LID AND BOX, WITH 2 SELF TAPPING #4 × 0.5". REPLACEMENT PN 159TS100BK, BLACK ANODIZED FOR BLACK BOXES (100/BAG). REPLACEMENT PN 159TS100, NICKEL PLATED FOR GRAY BOXES (100/BAG)
COLORS	(BK) BLACK, (GY) GRAY,

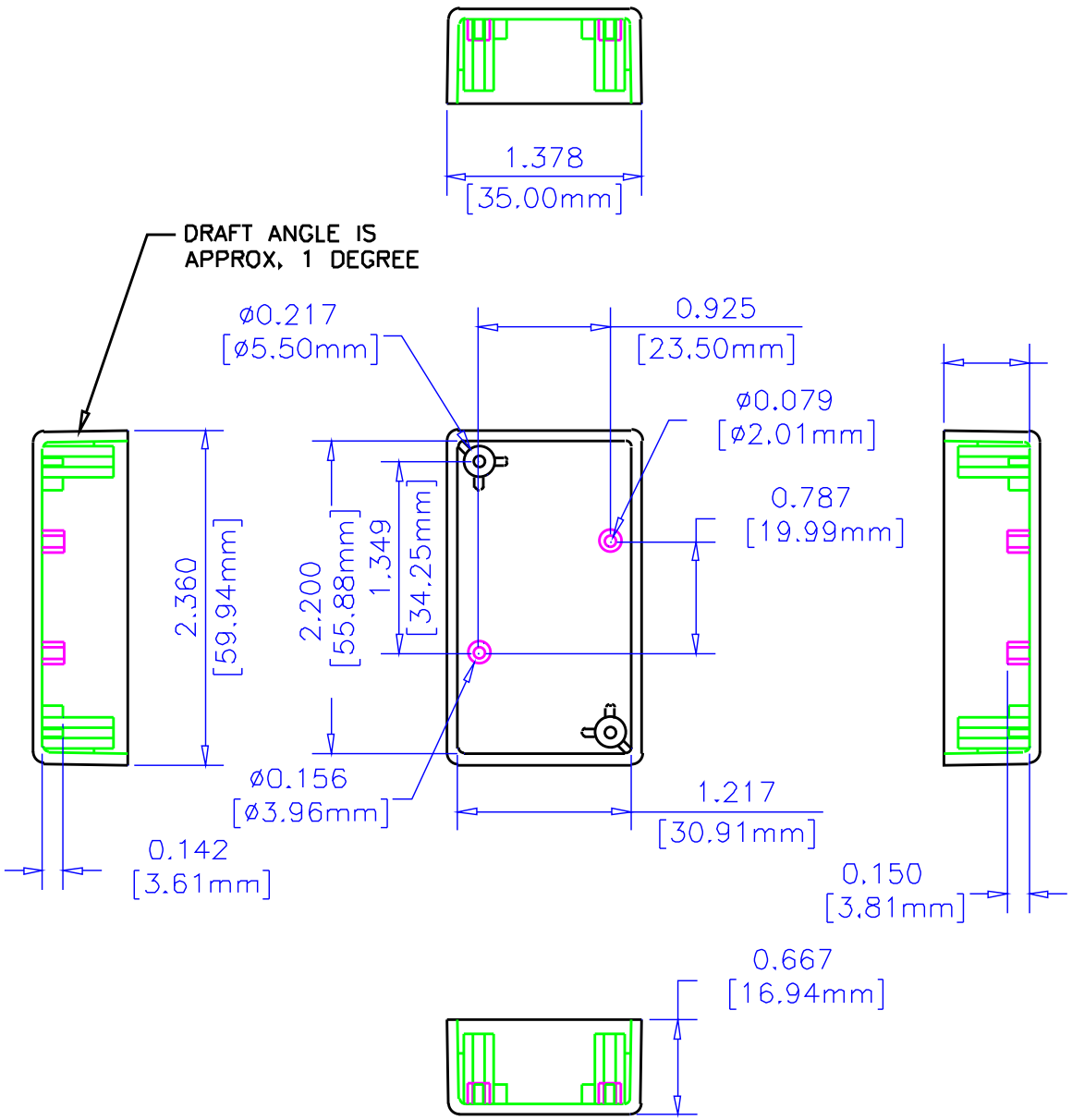

BOX

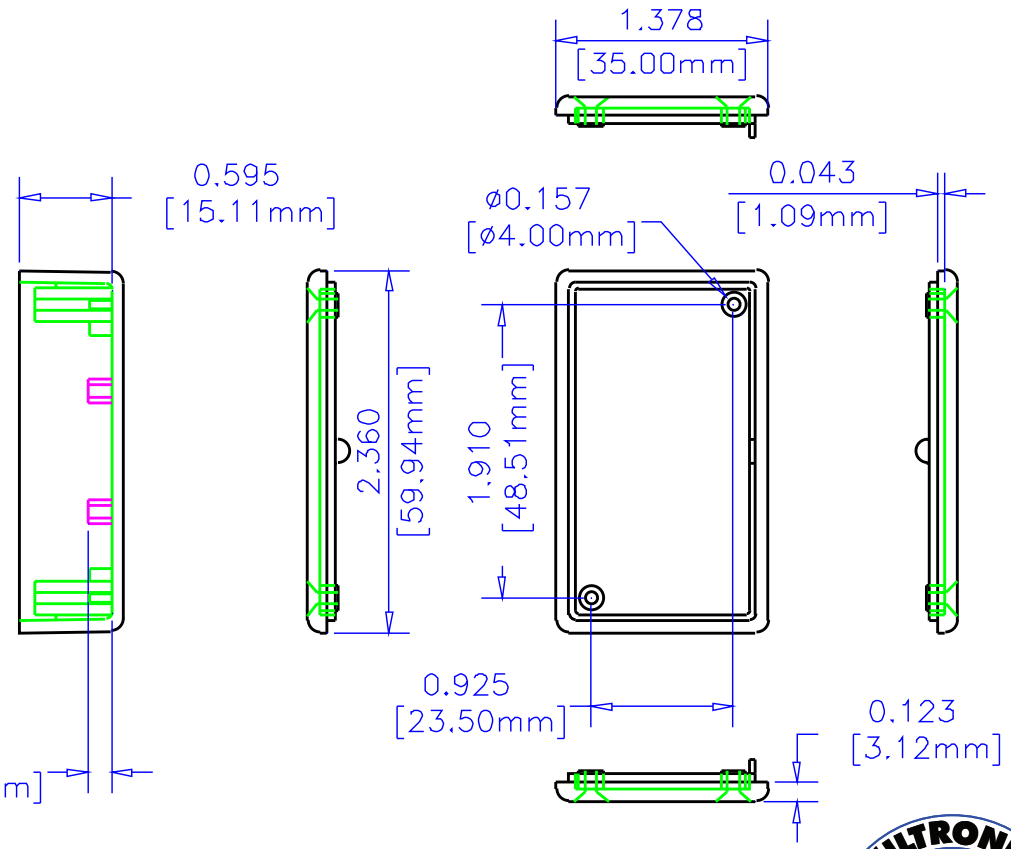

LID

WILTRONICS
Click here to
Buy Online Now
WWW.WILTRONICS.COM.AU

UNLESS OTHERWISE SPECIFIED DIMENSIONS ARE IN INCHES

X	+/- .1
XX	+/- .06
XXX	+/- .015
CUTS	+/- .005
ANGLES	+/- .5 DEG.

NOTICE
HAMMOND CLAIMS PROPRIETARY RIGHTS TO THE MATERIAL ON THIS DRAWING. IT IS INTENDED TO BE USED AS A REFERENCE FOR ENGINEERING INFORMATION ONLY. THIS INFORMATION MAY NOT BE USED TO MANUFACTURE PRODUCT WITHOUT WRITTEN PERMISSION FROM HAMMOND MANUFACTURING.

HAMMOND MANUFACTURING

WEB: WWW.HAMMONDMFG.COM

TITLE: HAMMOND 1551 SERIES PLASTIC ENCLOSURE

DRAWN BY	MJM	DATE	01/10/01
SCALE		PAGE	1 OF 1
PART NUMBER	1551H		