# UniFi® Access Hub

ui.com/install

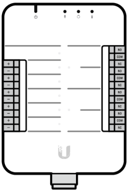

a

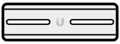

b

c

M4

d

---

## 1

ui.com/install

**A**

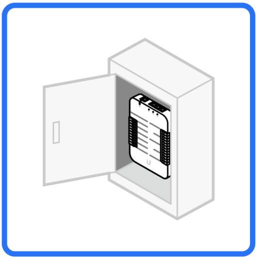

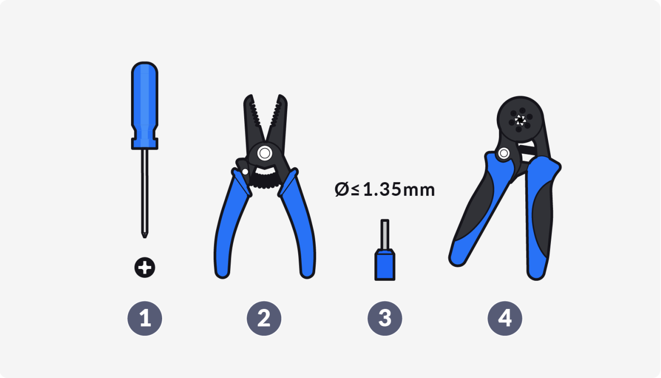
Ø≤1.35mm
1
2
3
4

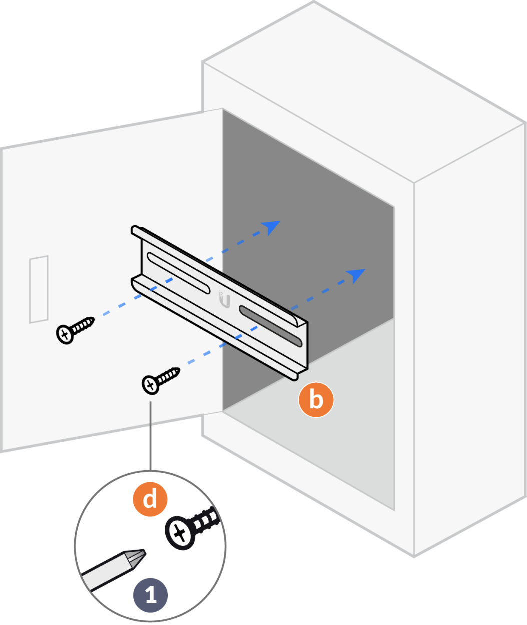

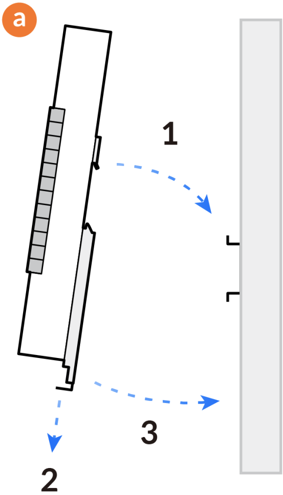

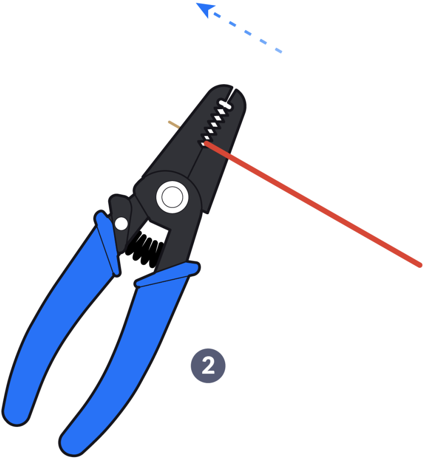

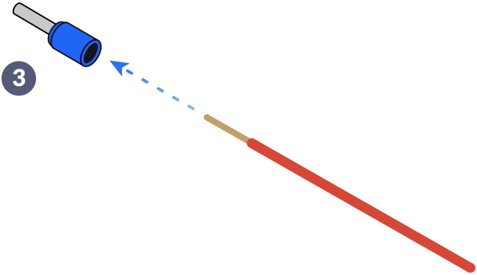

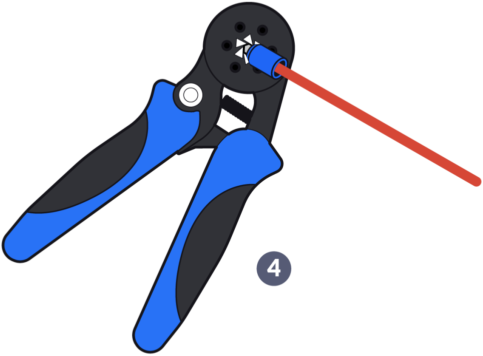

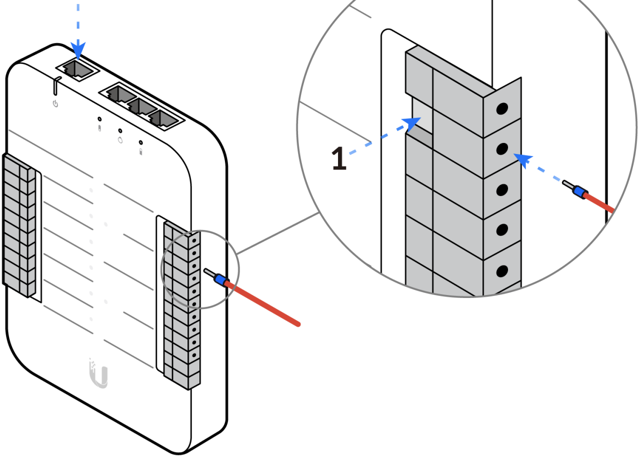

**B**

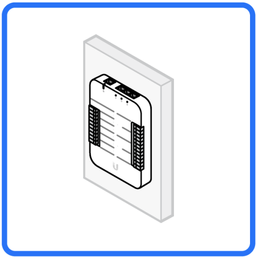

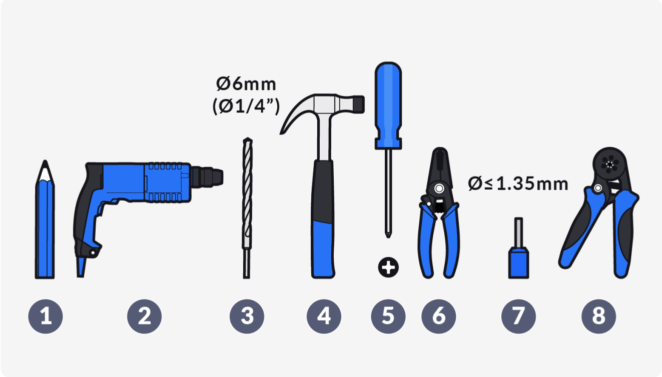
Ø6mm
(Ø1/4")
Ø≤1.35mm
1
2
3
4
5
6
7
8

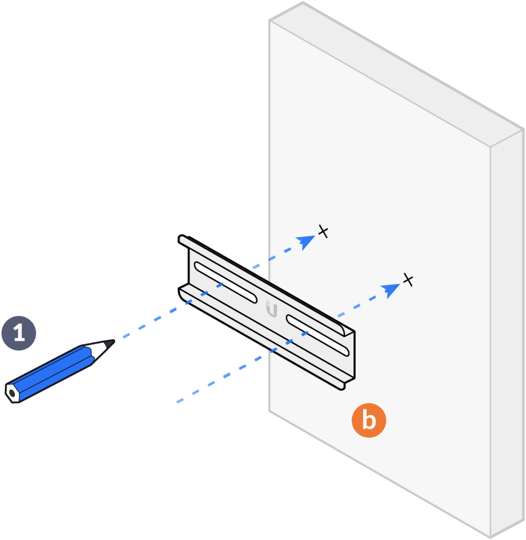

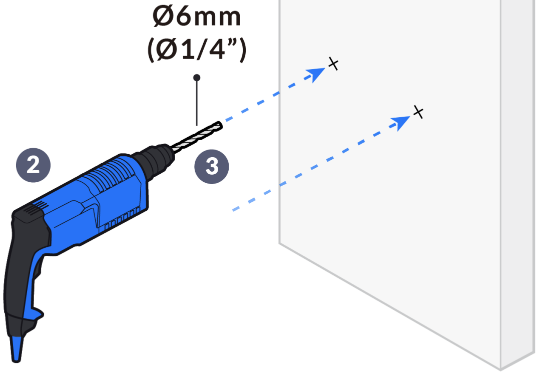

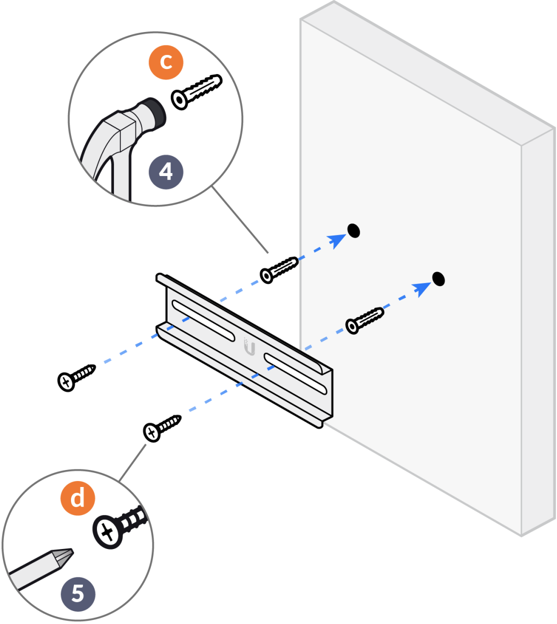

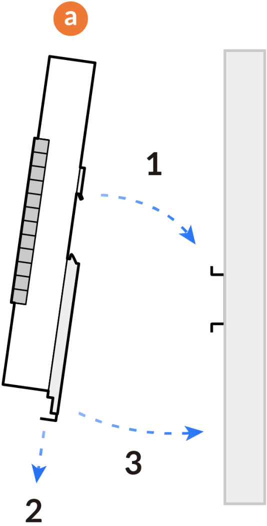

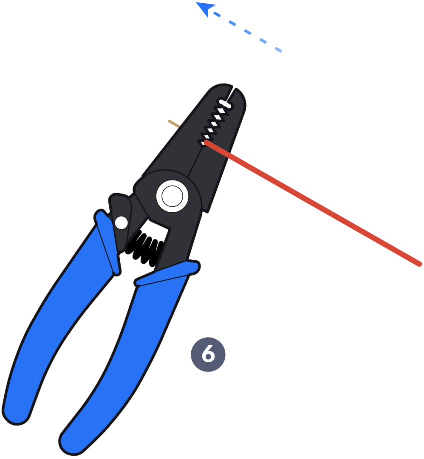

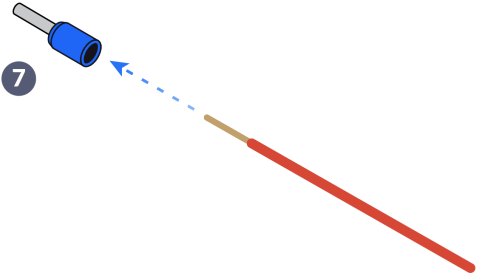

7

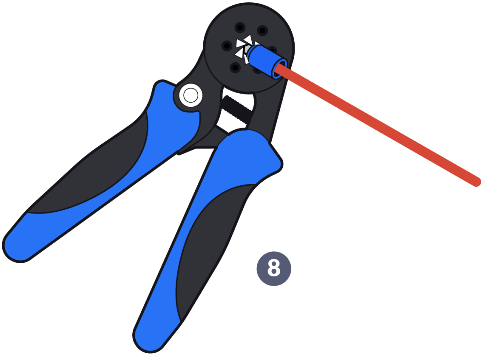

8

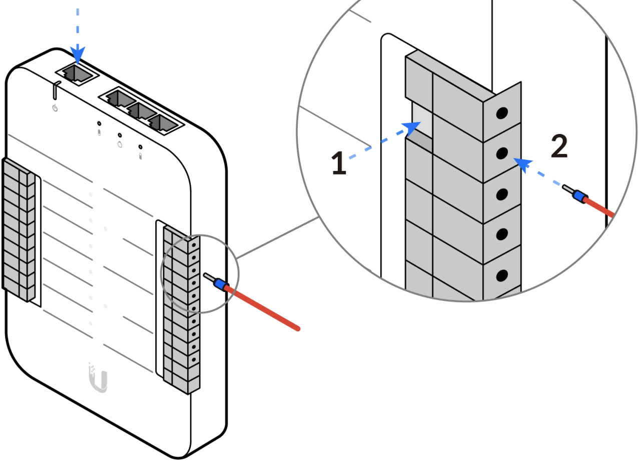

## 2

ui.com/install

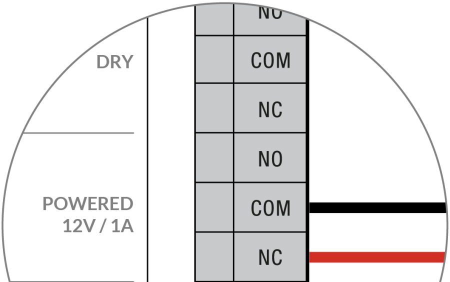
DRY
POWERED
12V / 1A
NO
COM
NC
NO
COM
NC

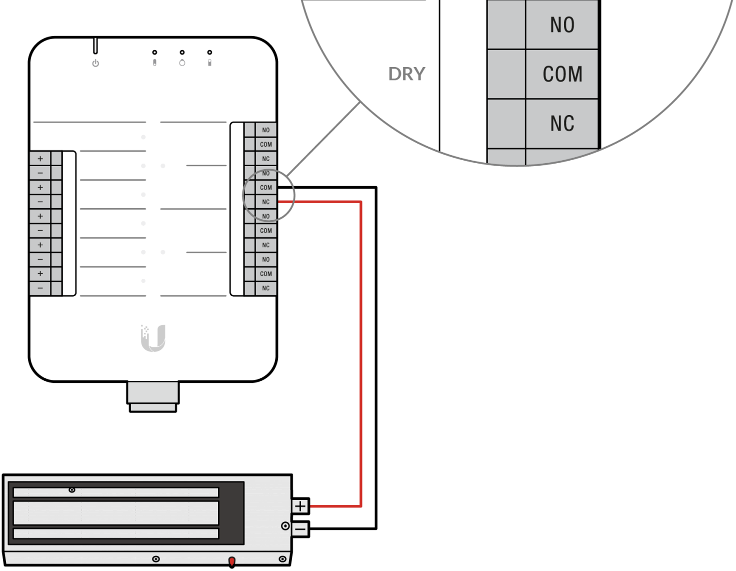
NO
COM
NC
DRY
NO
COM
NC
NO
COM
NC
NO
COM
NC
NO
COM
NC
+
–
+
–
+
–
+
–
+
–
+
–

Fail-Safe Lock

---

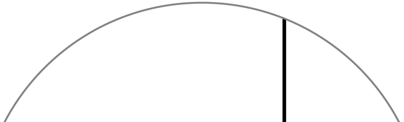

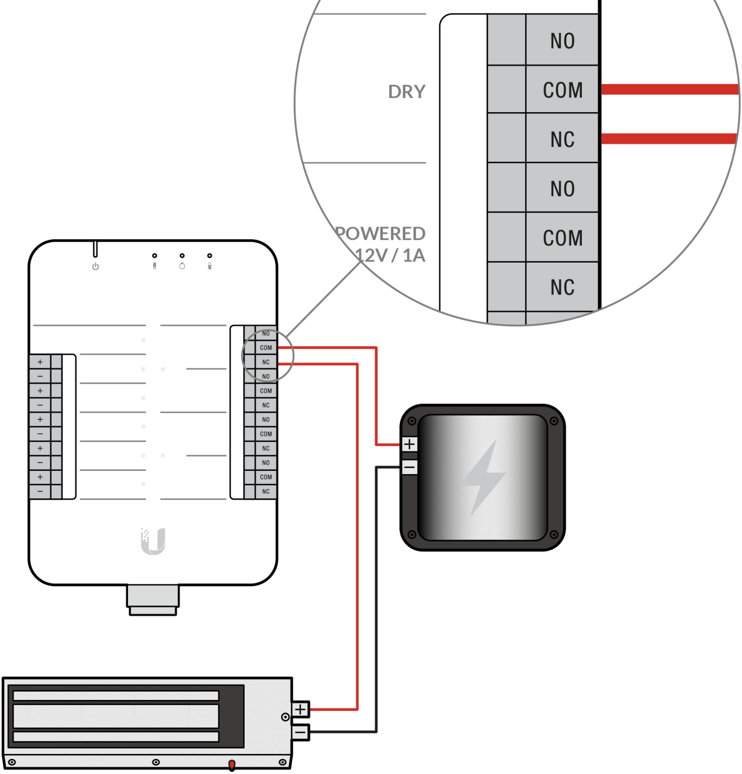
NO
COM
NC
NO
COM
NC
DRY
POWERED
12V / 1A
+
−
+
−

**Fail-Safe Lock**

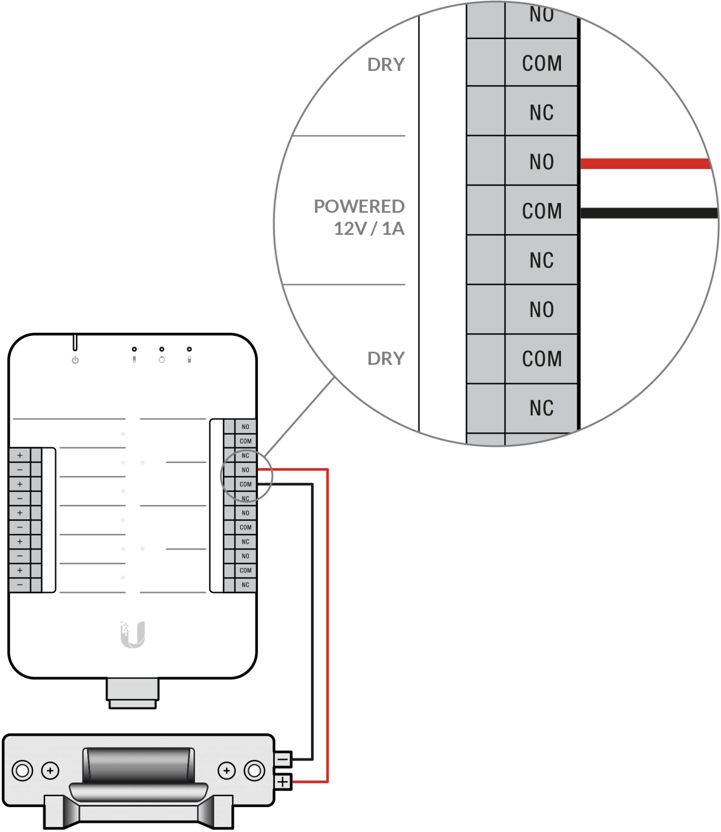
DRY
POWERED
12V / 1A
DRY
NO
COM
NC
NO
COM
NC
NO
COM
NC
+
−
+
−
+
−
+
−
+
−
NO
COM
NC
NO
COM
NC
NO
COM
NC
NO
COM
NC
−
+

Fail-Secure Lock

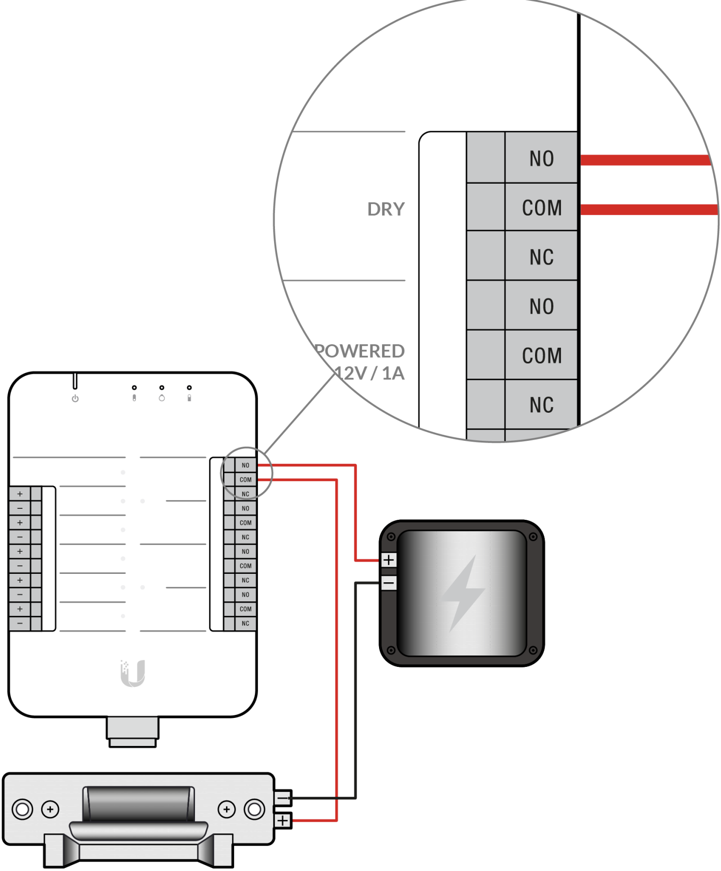
DRY
POWERED
12V / 1A
NO
COM
NC
NO
COM
NC
+
−
NO
COM
NC
+
−

**Fail-Secure Lock**

## Push Button

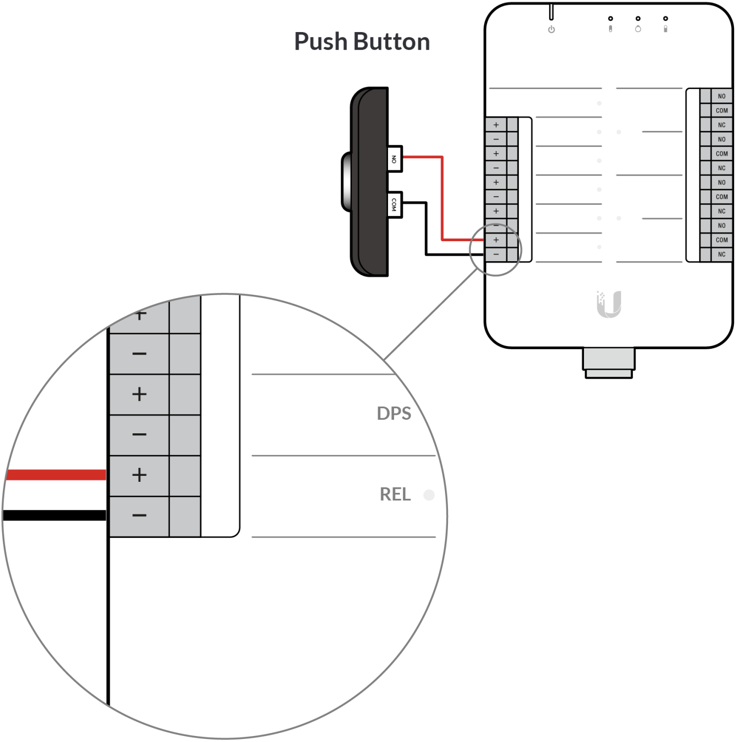
NO
COM
NO
COM
NC
NO
COM
NC
NO
COM
NC
NO
COM
NC
+
−
+
−
+
−
+
−
+
−
+
−
DPS
REL

---

## Door Position Switch (Door Sensor)

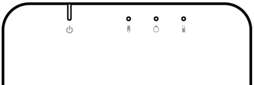

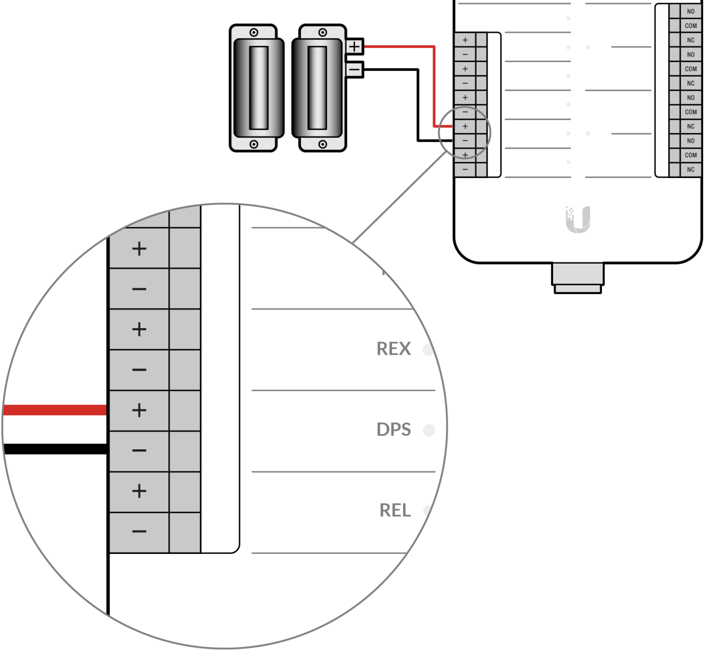
+
−
NO
COM
NC
REX
DPS
REL

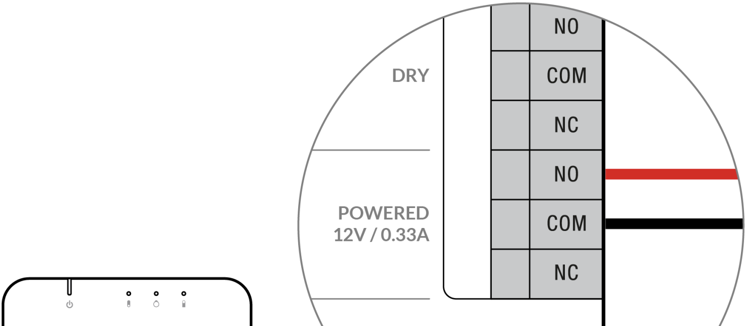
DRY
POWERED
12V / 0.33A
NO
COM
NC
NO
COM
NC

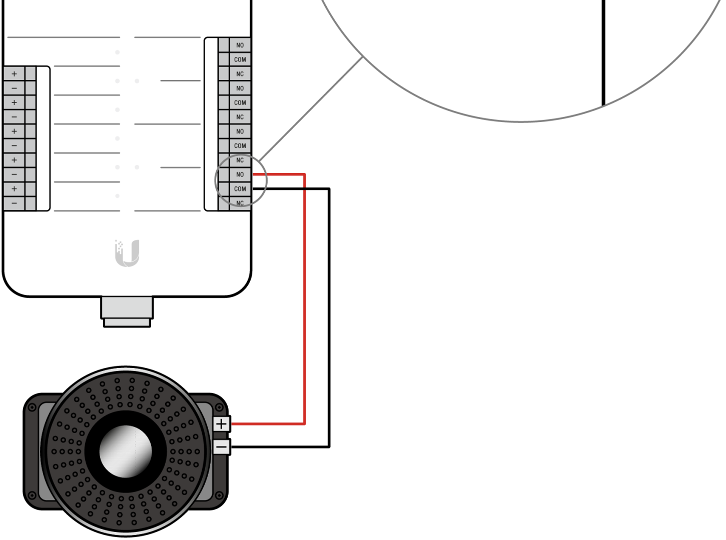
NO
COM
NC
NO
COM
NC
NO
COM
NC
NO
COM
NC
+
−
+
−
+
−
+
−
+
−
+
−

Siren

---

Motion Sensor

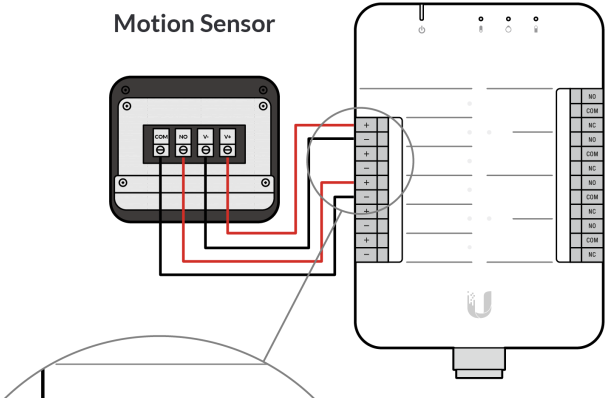
COM
NO
V-
V+
+
−
+
−
+
−
+
−
+
−
NO
COM
NC
NO
COM
NC
NO
COM
NC
NO
COM
NC

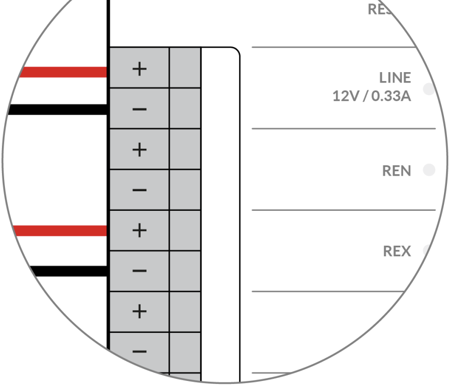
RES
+
−
LINE
12V / 0.33A
REN
REX

# 3

ui.com/install

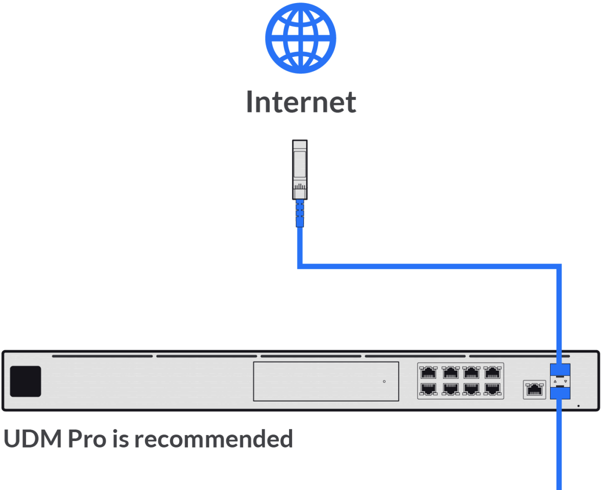

**UDM Pro is recommended**

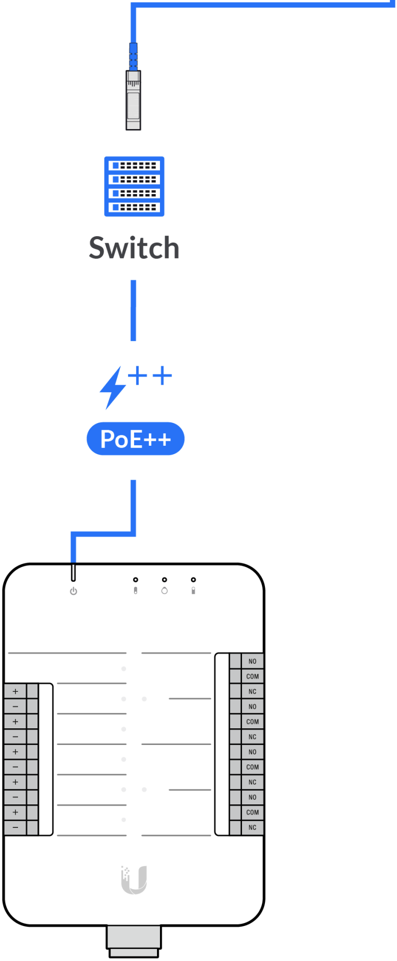
Switch
PoE++
+
−
+
−
+
−
+
−
+
−
NO
COM
NC
NO
COM
NC
NO
COM
NC
NO
COM
NC

**4**

ui.com/install

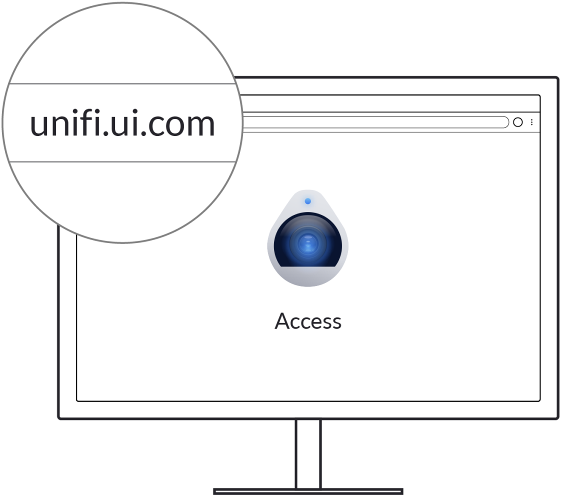
unifi.ui.com
Access

Installation Video

Get Answers
help.ui.com

UI Support

©2021 Ubiquiti Inc. All rights reserved. Ubiquiti, Ubiquiti Networks, the Ubiquiti U logo, UniFi, and AirFiber are trademarks or registered trademarks of Ubiquiti Inc. in the United States and in the United States and in other countries. Apple and the Apple logo are trademarks of Apple Inc., registered in the U.S. and other countries. App Store and the Apple logo are trademarks of Apple Inc., registered in the U.S. and other countries. Android, Google, Google Play, the Google Play logo and other marks are trademarks of Google LLC. All other trademarks are the property of their respective owners.