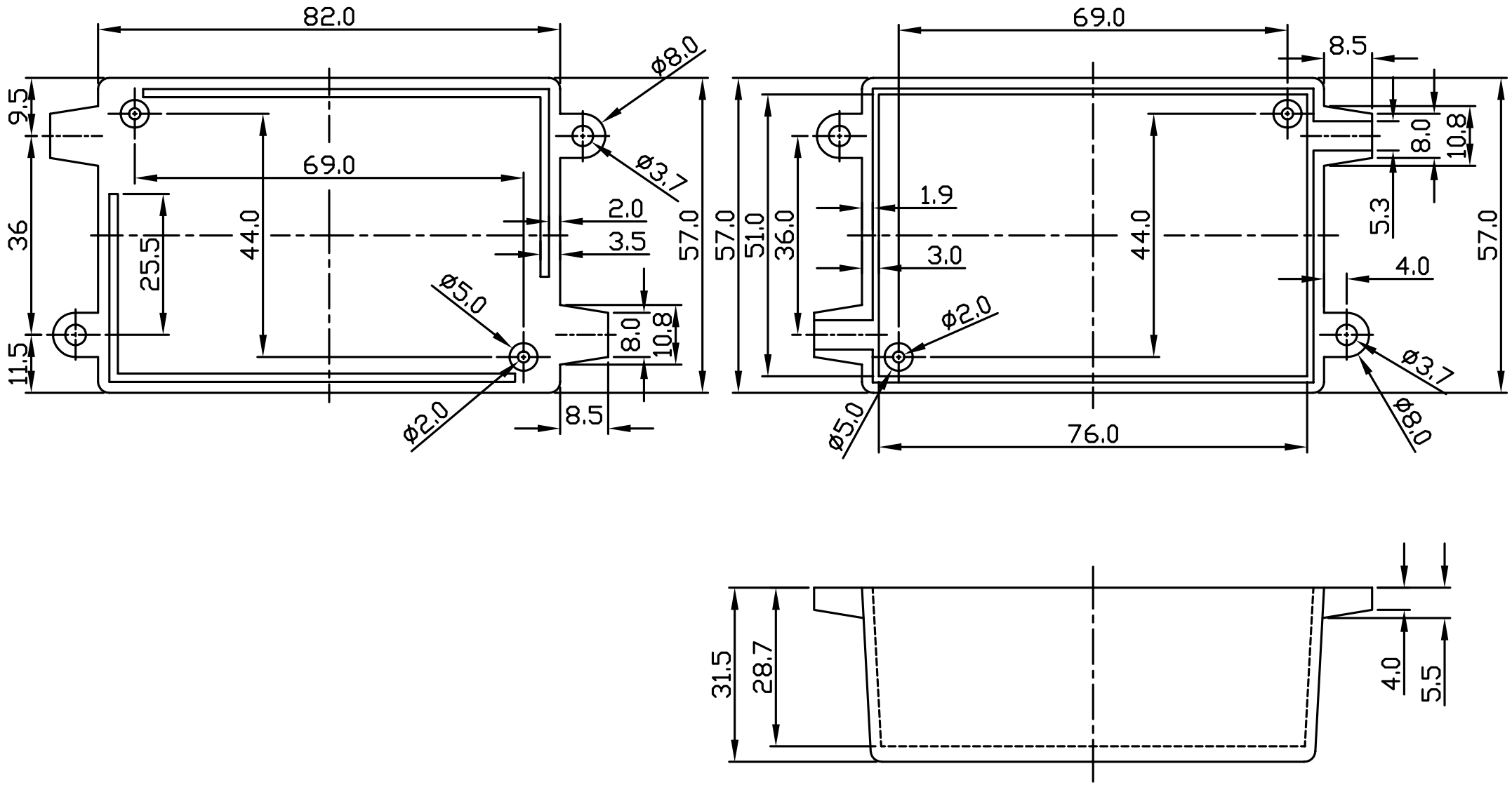

WILTRONICS

CA0073 ABS Bulkhead Case Black 82mm x 57mm x 31.5mm